KC7161,2,5,8TAL

Widespread Lavatory Faucet With Brass Pop-Up

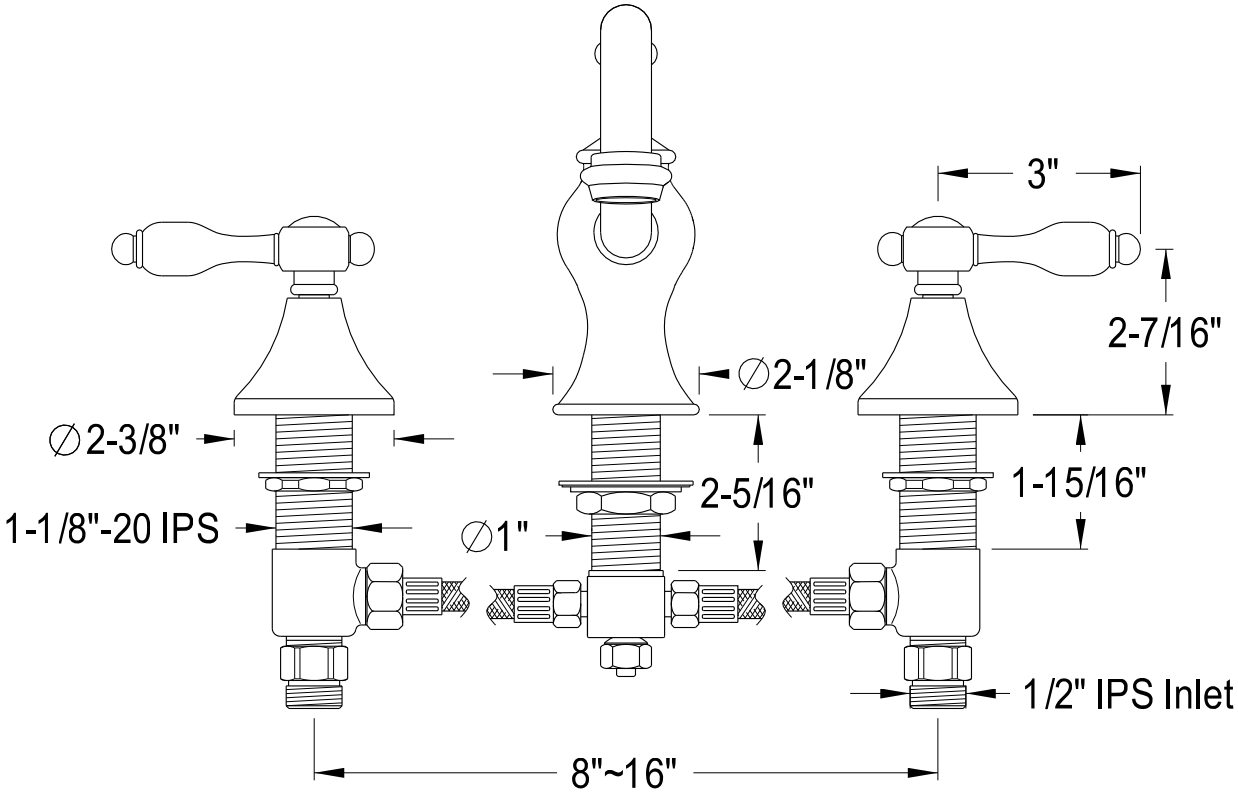

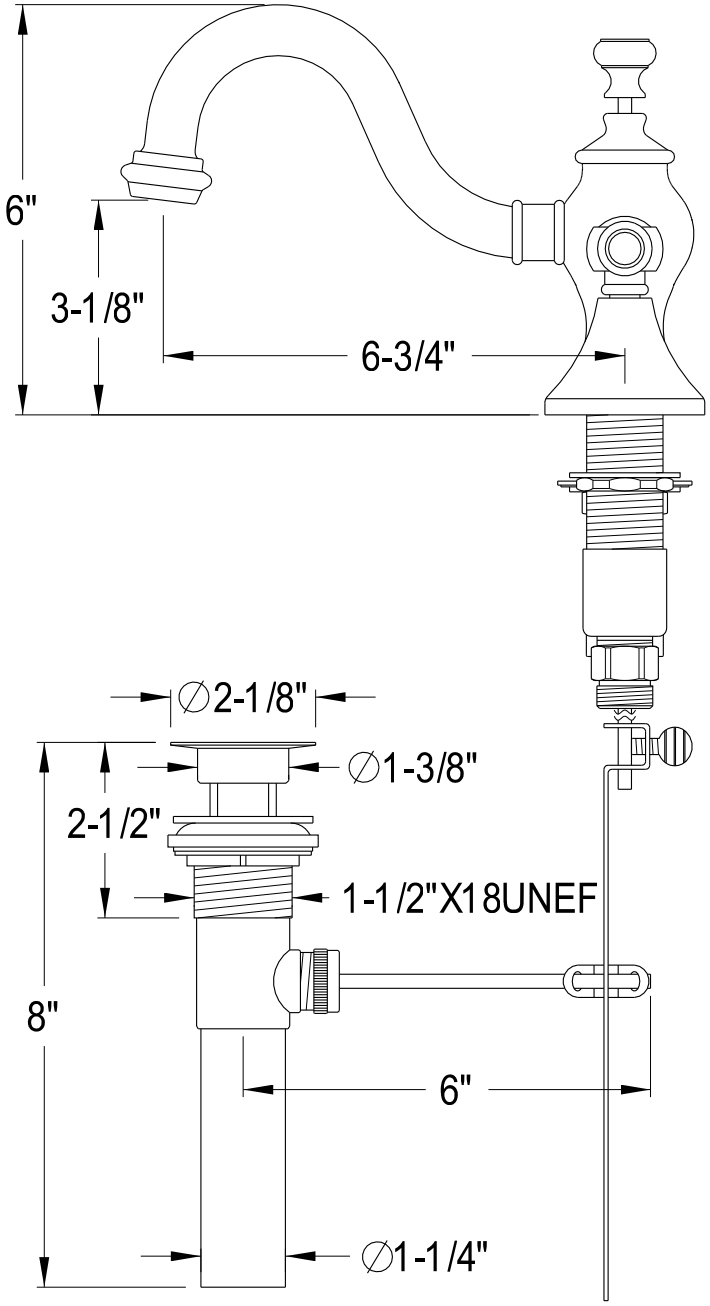

Ref# KC7161,2,5,8TAL | 2016-11-A